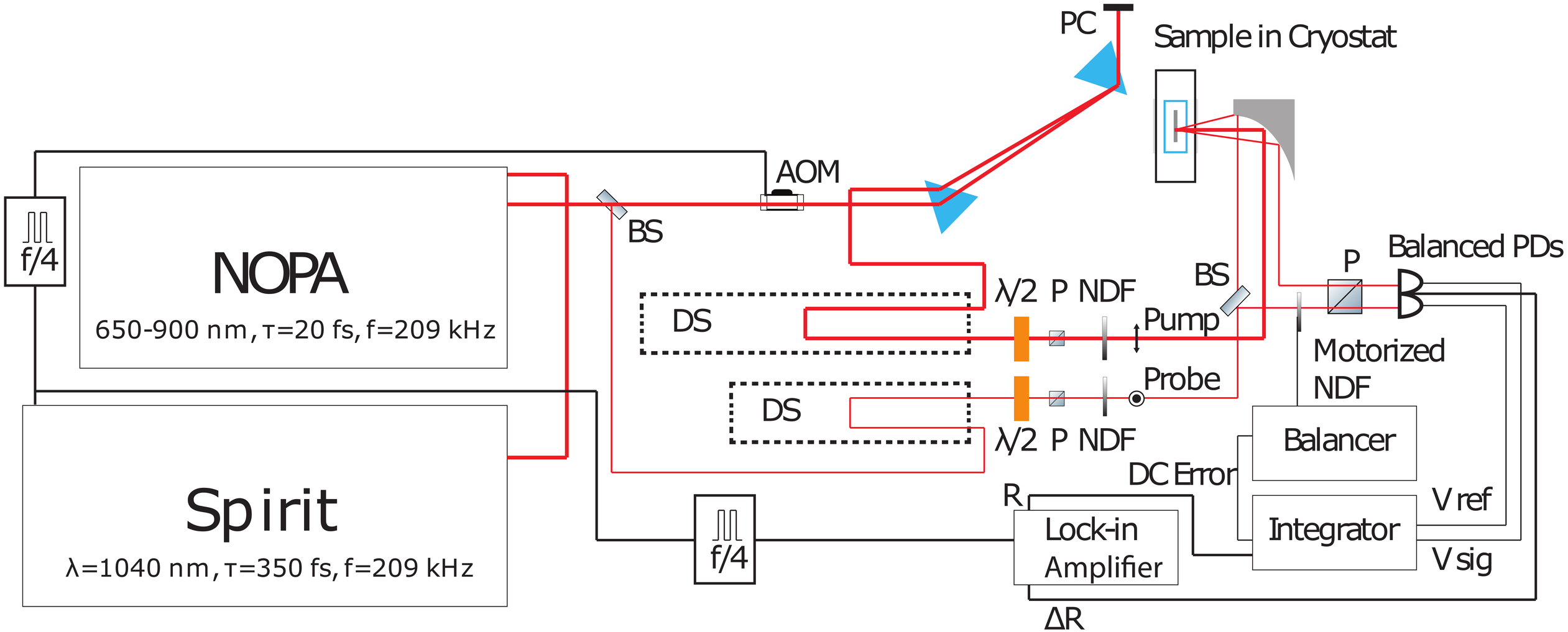
PC
Sample in Cryostat
AOM
BS
f/4
NOPA
650-900 nm, τ=20 fs, f=209 kHz
DS
λ/2 P NDF
BS
P
Balanced PDs
Pump
Motorized
NDF
Probe
DS
λ/2 P NDF
Balancer
DC Error
R
Lock-in
Amplifier
Integrator
V ref
V sig
f/4
Spirit
λ=1040 nm, τ=350 fs, f=209 kHz
ΔR