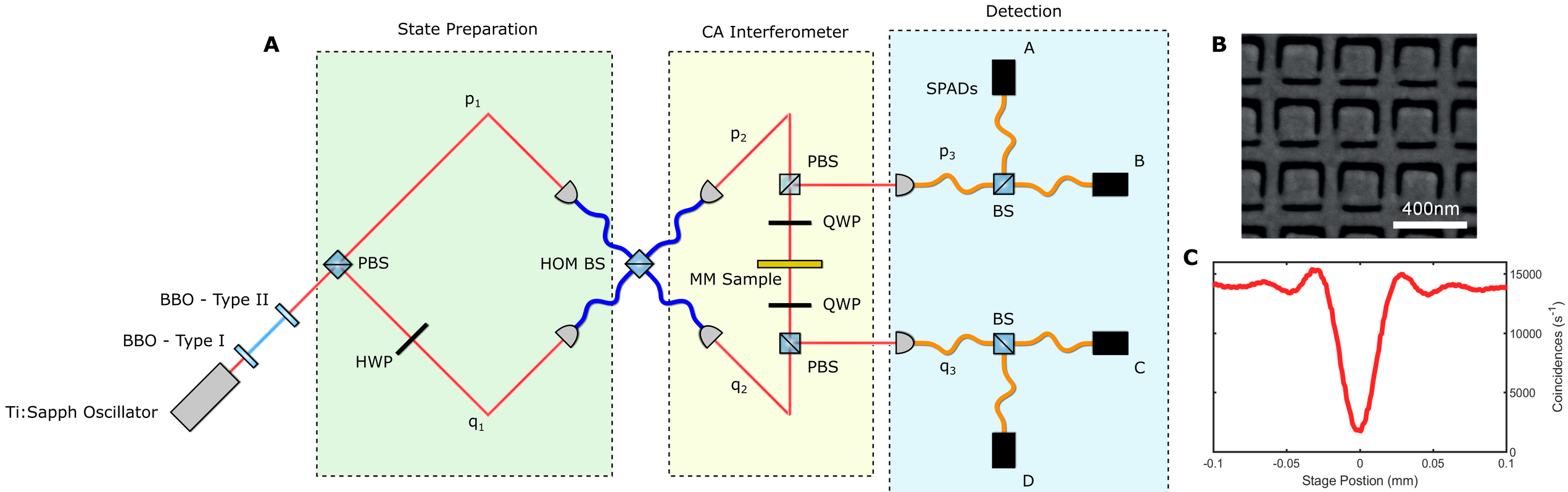
A
State Preparation
CA Interferometer
Detection
Ti:Sapph Oscillator
BBO - Type I
BBO - Type II
PBS
HWP
p_1
q_1
HOM BS
p_2
q_2
PBS
QWP
MM Sample
QWP
PBS
SPADs
A
B
C
D
p_3
q_3
BS
BS
B
400nm
C
Coincidences (s^{-1})
Stage Postion (mm)
-0.1
-0.05
0
0.05
0.1
0
5000
10000
15000