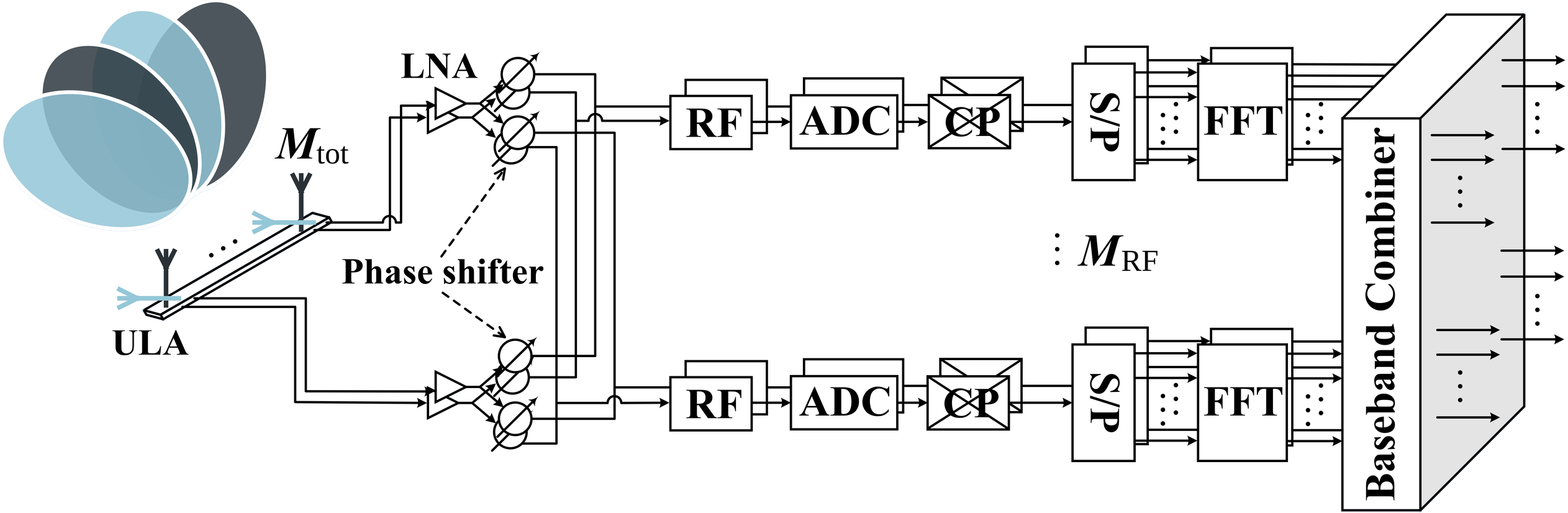
LNA
M_{tot}
ULA
Phase shifter
RF
ADC
CP
S/P
FFT
M_{RF}
Baseband Combiner