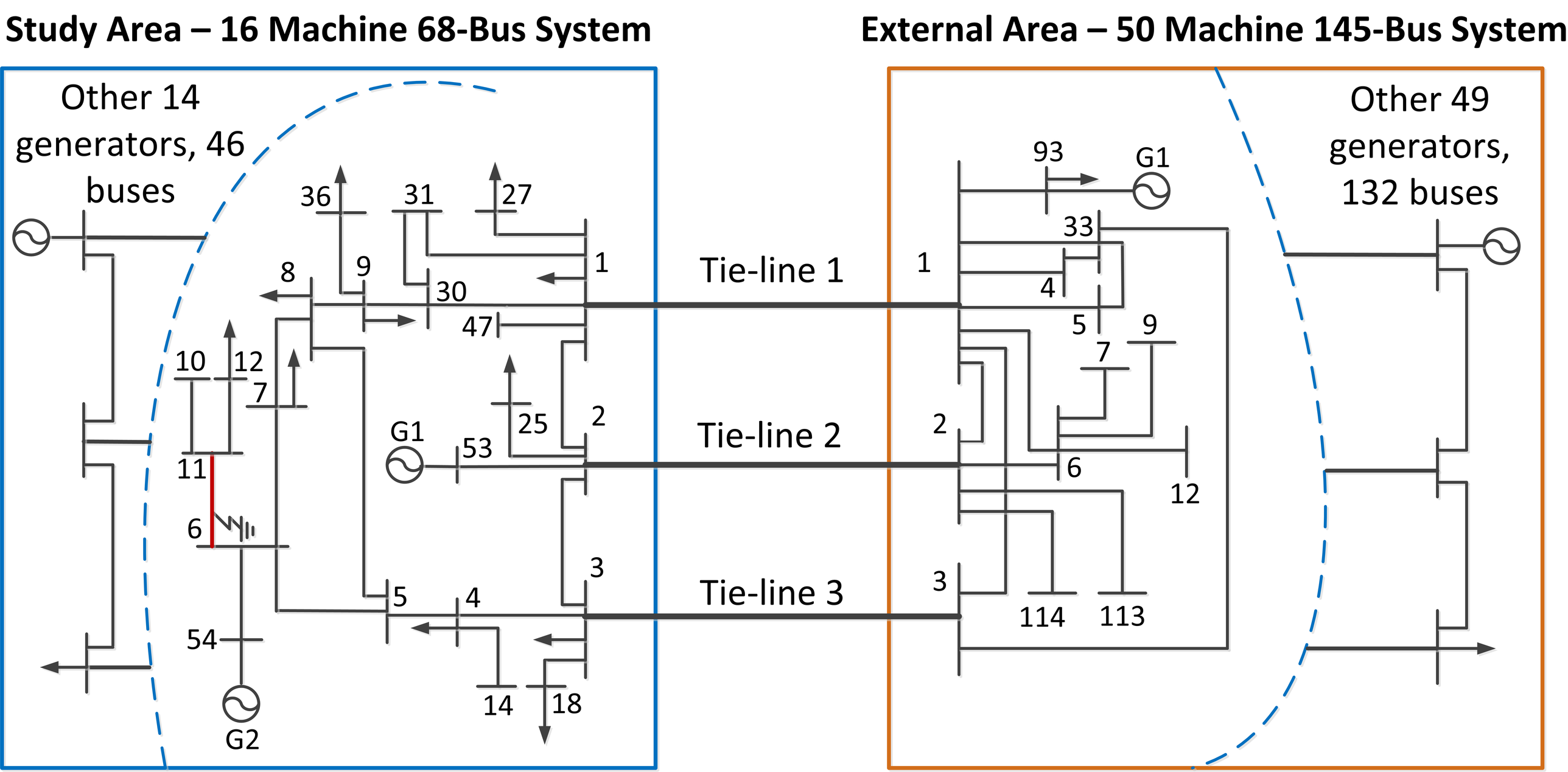
Study Area – 16 Machine 68-Bus System
External Area – 50 Machine 145-Bus System
Other 14 generators, 46 buses
Other 49 generators, 132 buses
Tie-line 1
Tie-line 2
Tie-line 3
36
31
27
8
9
30
1
47
10
12
7
25
2
G1
53
11
6
3
5
4
54
14
18
G2
93
G1
33
1
4
5
9
7
2
6
12
3
114
113