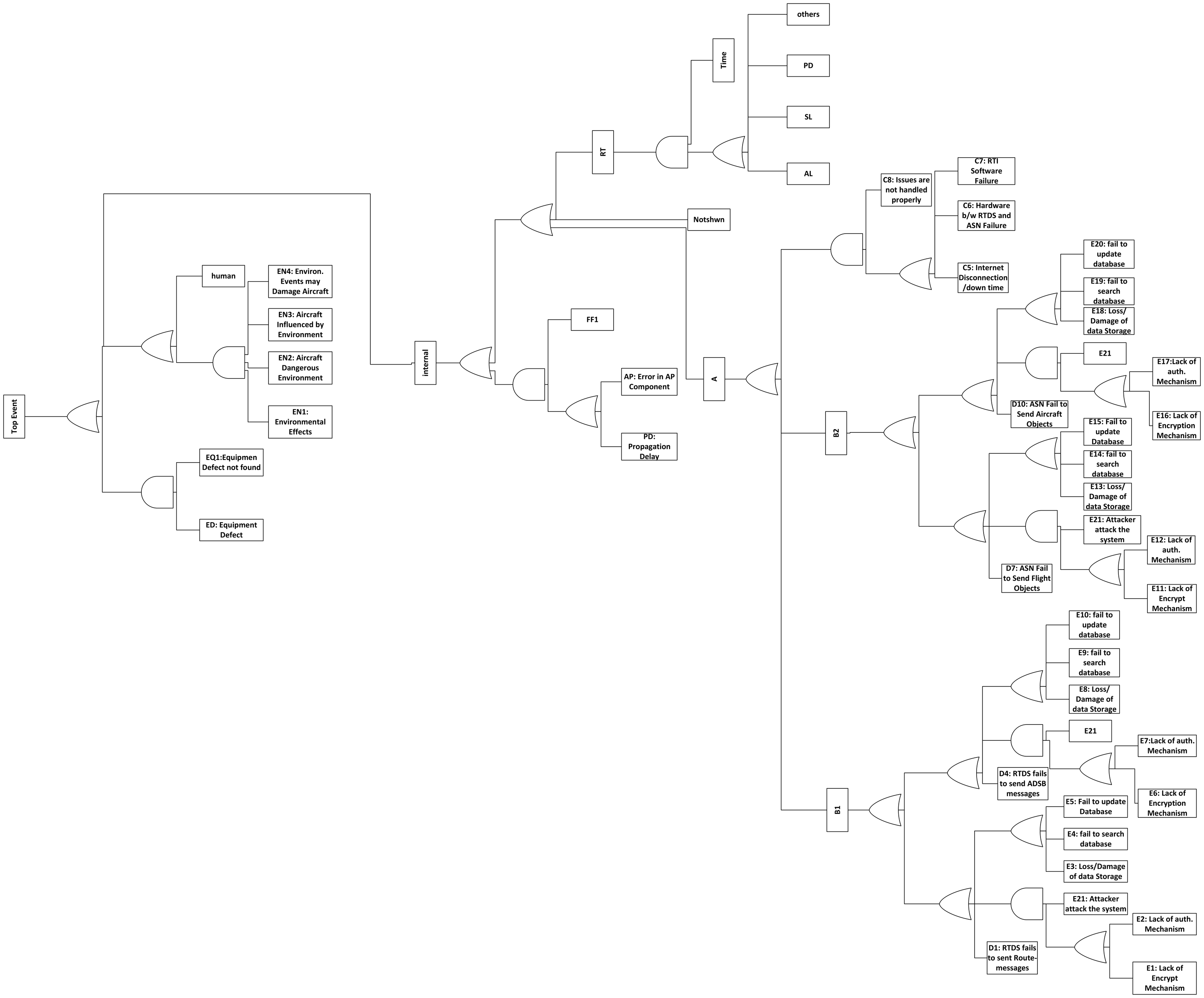
Top Event
human
EN4: Environ. Events may Damage Aircraft
EN3: Aircraft Influenced by Environment
EN2: Aircraft Dangerous Environment
EN1: Environmental Effects
EQ1:Equipmen Defect not found
ED: Equipment Defect
internal
RT
Time
others
PD
SL
AL
Notshwn
FF1
AP: Error in AP Component
PD: Propagation Delay
A
C8: Issues are not handled properly
C7: RTI Software Failure
C6: Hardware b/w RTDS and ASN Failure
C5: Internet Disconnection /down time
B2
E20: fail to update database
E19: fail to search database
E18: Loss/ Damage of data Storage
E21
E17:Lack of auth. Mechanism
E16: Lack of Encryption Mechanism
D10: ASN Fail to Send Aircraft Objects
E15: Fail to update Database
E14: fail to search database
E13: Loss/ Damage of data Storage
E21: Attacker attack the system
E12: Lack of auth. Mechanism
E11: Lack of Encrypt Mechanism
D7: ASN Fail to Send Flight Objects
B1
E10: fail to update database
E9: fail to search database
E8: Loss/ Damage of data Storage
E21
E7:Lack of auth. Mechanism
E6: Lack of Encryption Mechanism
D4: RTDS fails to send ADSB messages
E5: Fail to update Database
E4: fail to search database
E3: Loss/Damage of data Storage
E21: Attacker attack the system
E2: Lack of auth. Mechanism
E1: Lack of Encrypt Mechanism
D1: RTDS fails to sent Route-messages