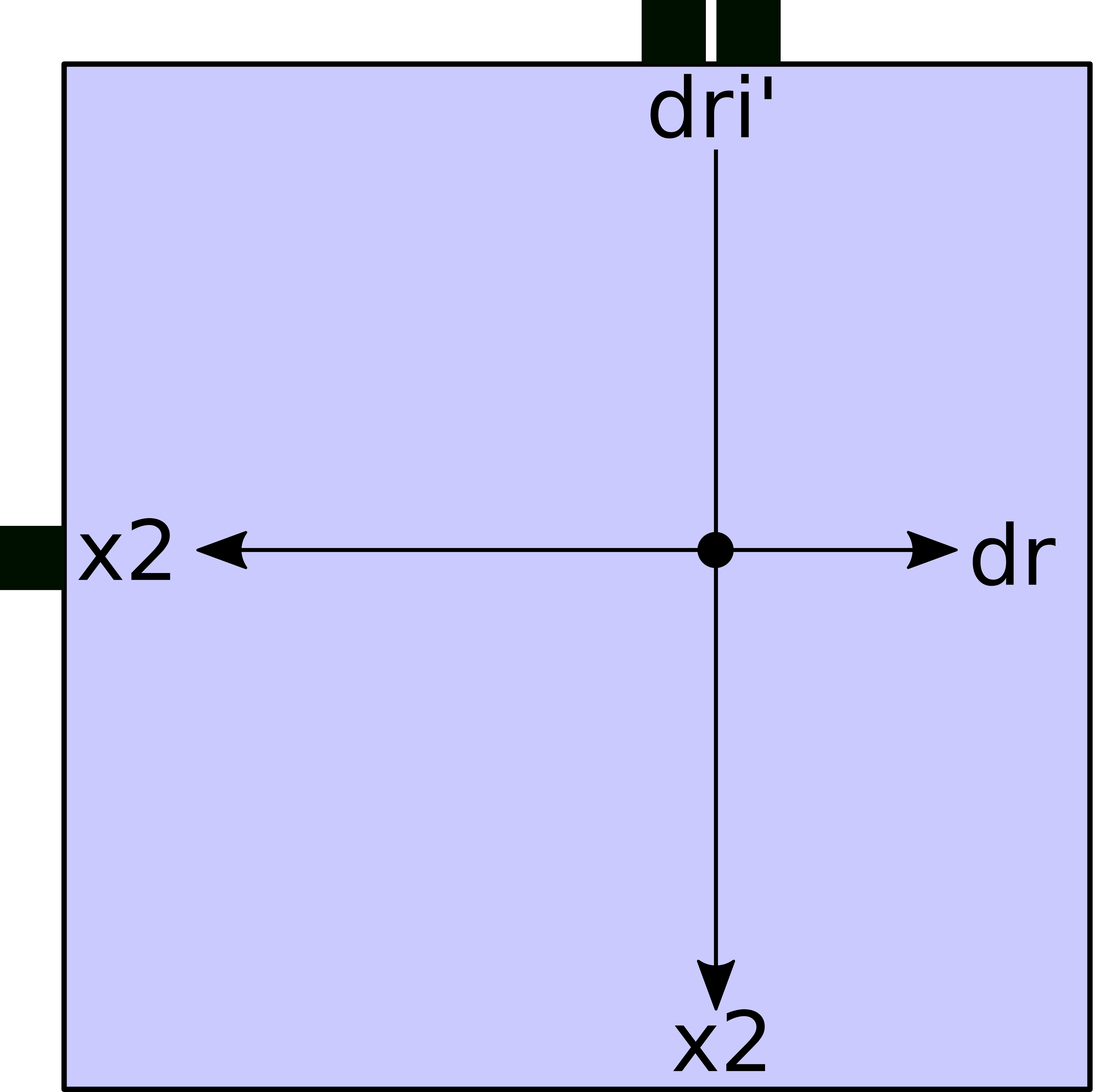
dri'
x2
dr
x2

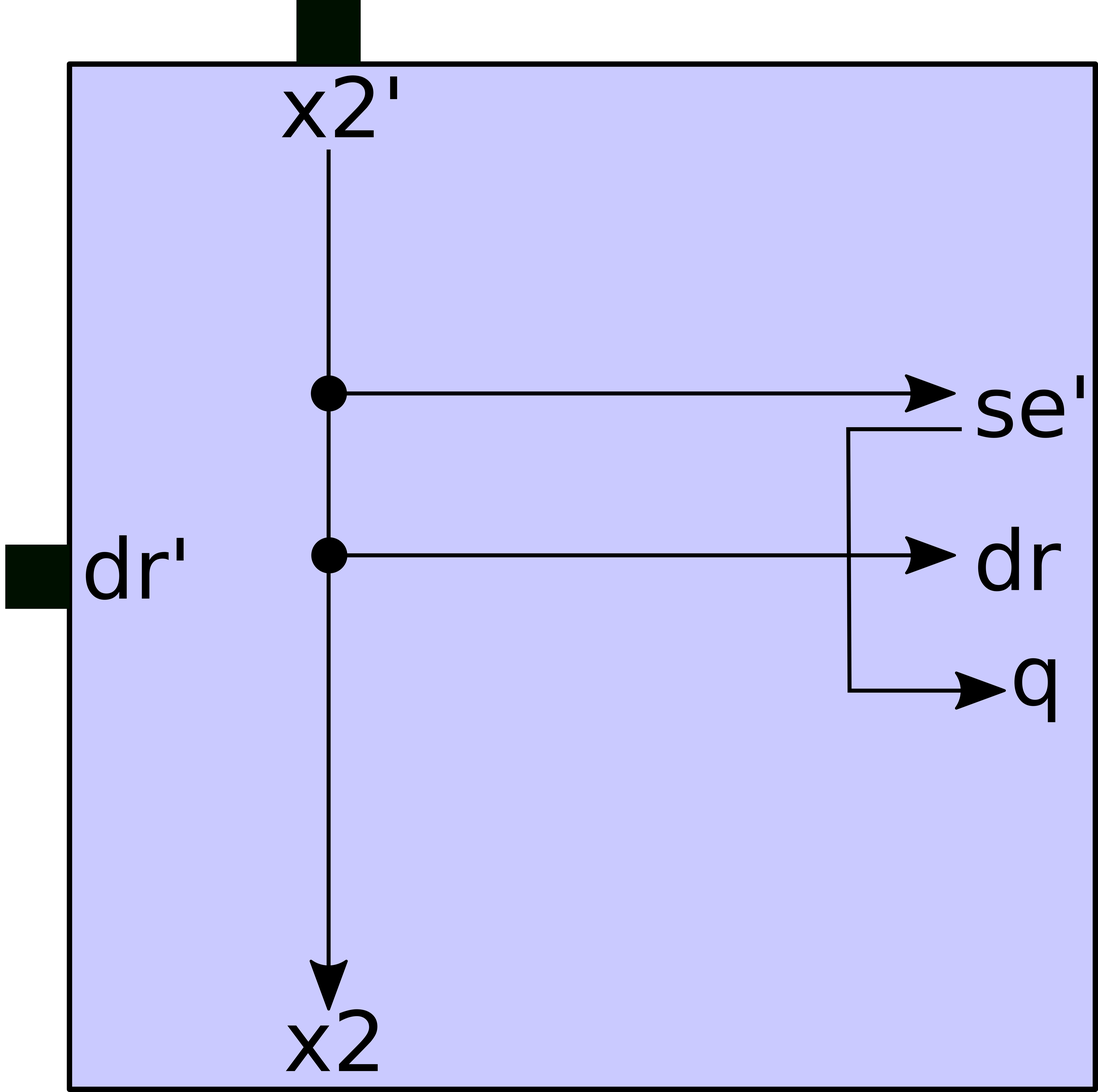
x2'
se'
dr'
dr
q
x2