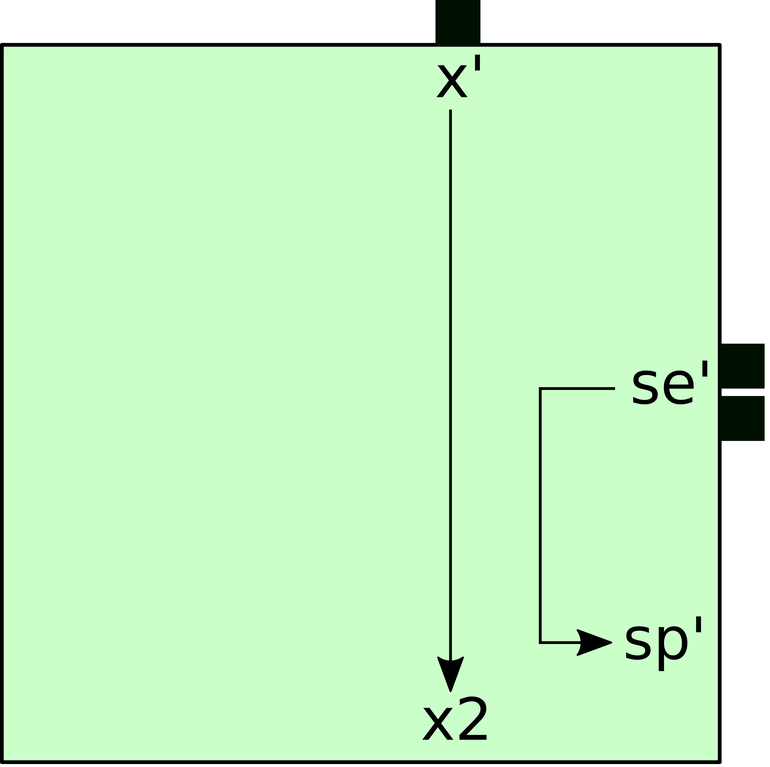
x'
se'
sp'
x2

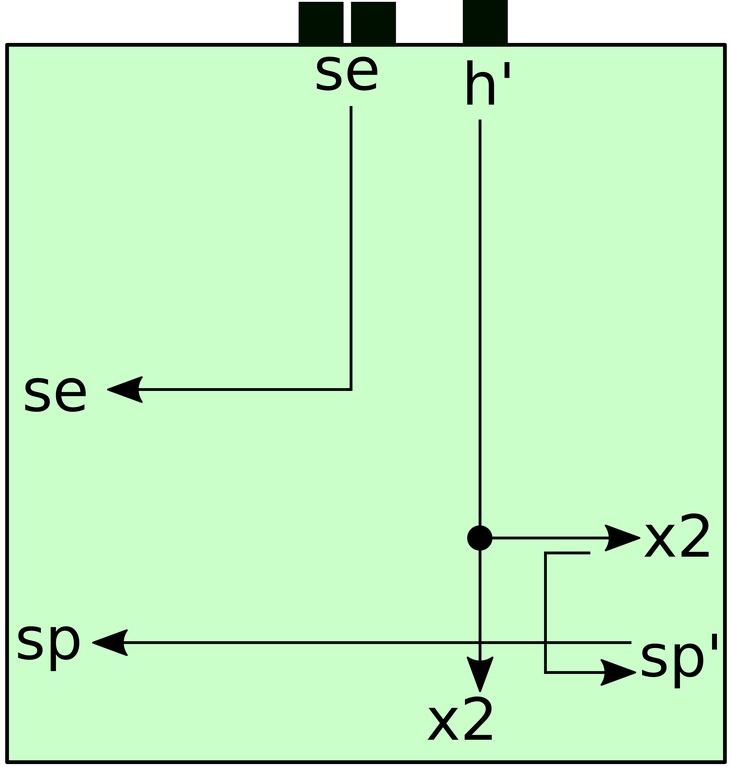
se
h'
se
x2
sp
sp'
x2

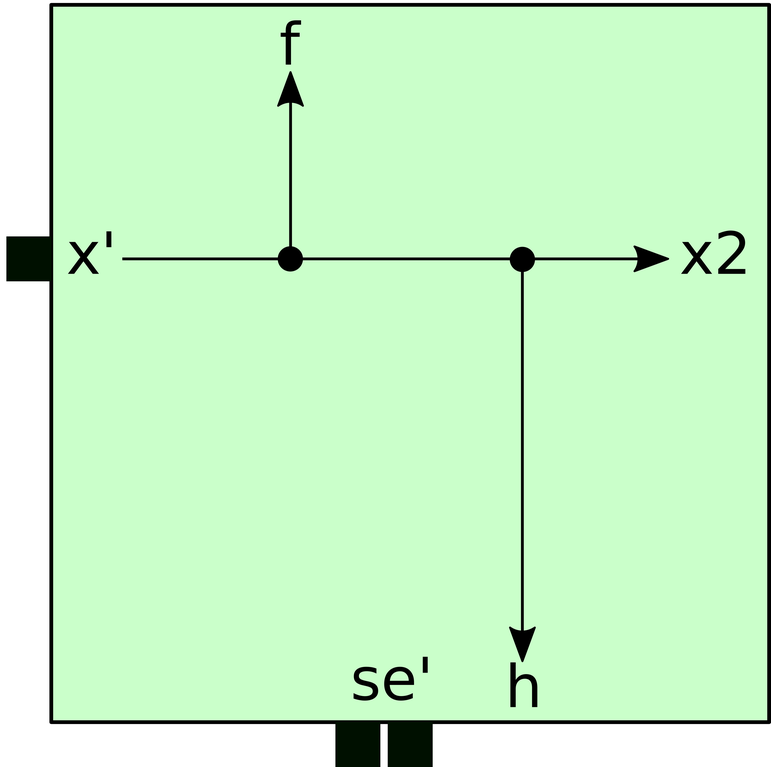
f
x'
x2
se'
h