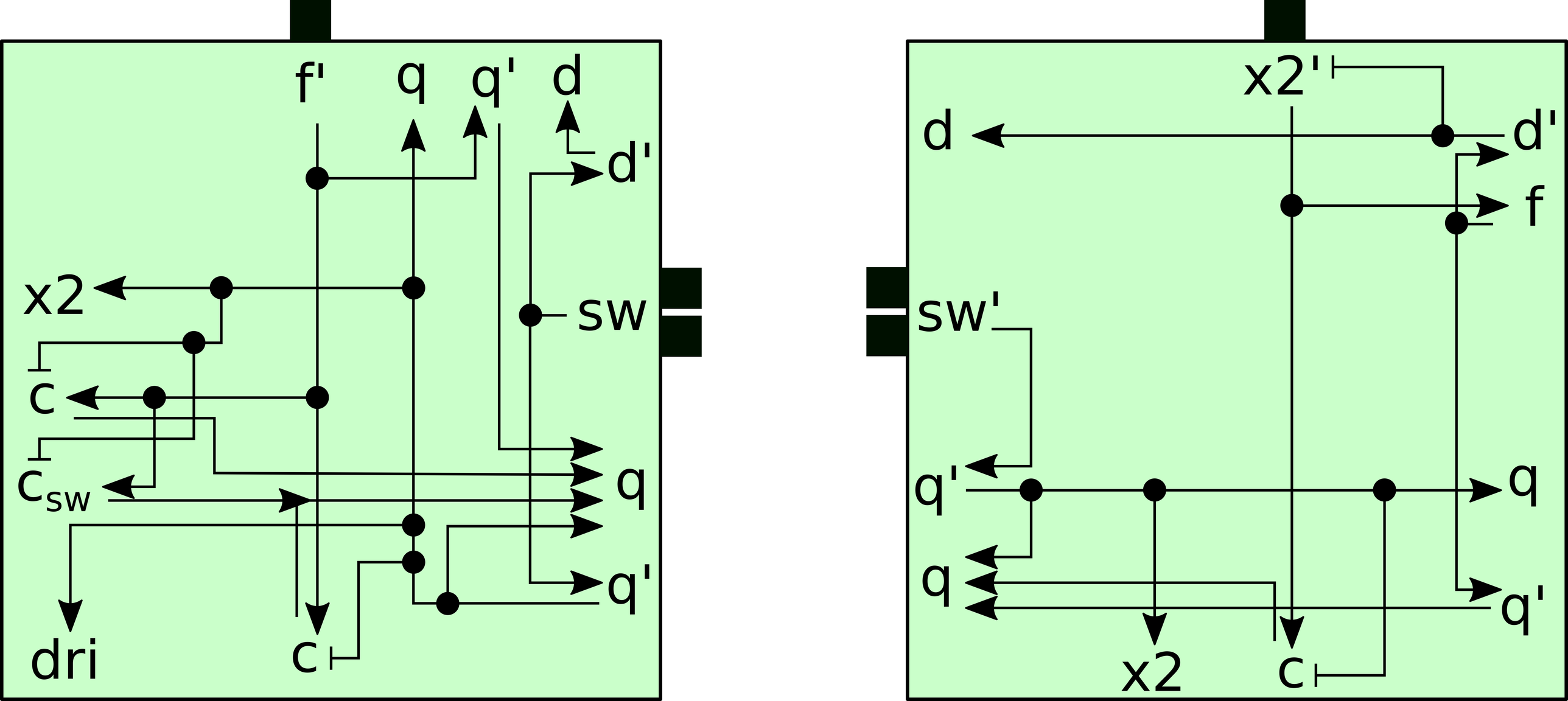
f'
q
q'
d
d'
x2
sw
c
c_{sw}
q
q'
dri
c
x2'
d
d'
f
sw'
q'
q
q
q'
x2
c