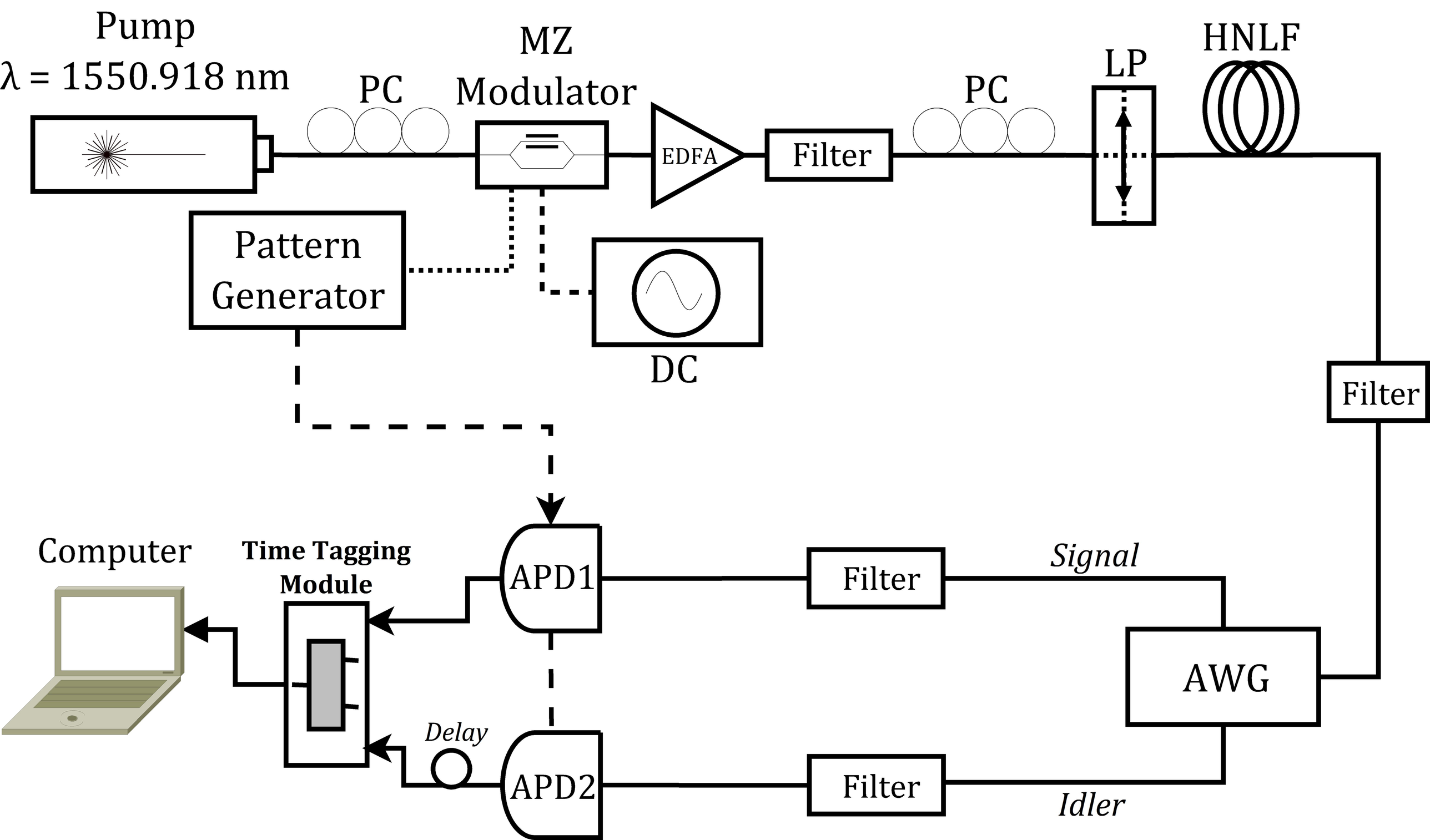
Pump
λ = 1550.918 nm
PC
MZ
Modulator
EDFA
Filter
PC
LP
HNLF
Pattern
Generator
DC
Filter
Computer
Time Tagging
Module
APD1
Filter
Signal
AWG
Delay
APD2
Filter
Idler